KVX

MORE BITE FOR YOUR MONEY

INSTALLATION PROCEDURES

2019 edition

www.kvx.no

Installation procedure for cutting-edges

When installing KVX Front Plates (Bucket Lips), ALWAYS refer to the present "**Installation Procedure For Cutting Edges**" . Welding should be performed in accordance with best practice and only by those fully qualified and experienced in the welding of hardened steel plates. KVX bear no responsibility for damage to lip or bucket resultant from inexperienced personnel or poor welding practice/ procedures.

The following Guidelines should also be followed wherever possible to:

1. minimize the risk of cracks developing between the Heat Effected Zone and KVX Bolt Holes.
2. ensure sufficient clearance between Bolts and Bucket Side ¬plates to enable use of KVX Tooling

Preparations

Note measurements A and B as indicated in the fig1 for excavator and wheel loader buckets respectively. It is imperative that the bucket tip radius and volume remain unchanged when the new cutting-edge is installed. Remove the old edge by flame cutting clear off the existing weld. Cut and grind welding bevels. Remove paint, oil and other impurities as well as any remaining manganese steel from the welding zone. Install new edge to measurements A and B and weld according to these instructions.

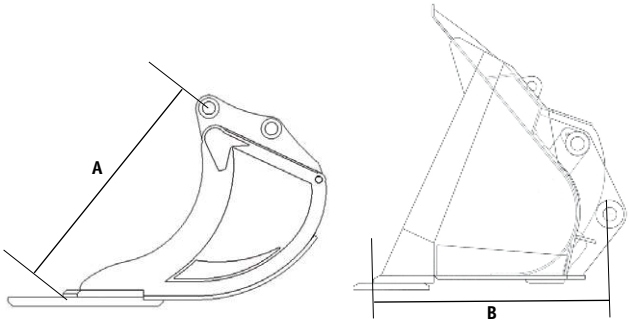

FIG. 1

Dimensional constrains

Minimum Measurements Near Bolt Holes

Excavators

On excavators where the Front Plate (Lip) is threaded for KVX Teeth:

The minimum distance "X" is according the following tab.

Bolt size	Distance X from the threaded hole
M52	X =15
M60	X=16,5
M68	X=18
M80	X=18**
M90	X=18**

*** in case of side plates over 60 mm contact KVX*
**** for threaded holes with diameter M36<D<M48 X =10*

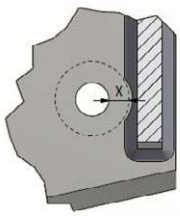

Wheel Loaders, Shovels (& some larger excavators)

For KVX systems with Teeth Bolt Heads inside the bucket (threaded Teeth)

Minimum Distance "D" from Bucket internal side plate to center of nearest KVX Bolt Hole:

A) When utilizing KVX Spanners only, D=:

M27: 50 mm
M36: 60 mm
M48: 70 mm
M60: 85 mm
M68: 80 mm
M80: 95 mm
M90: 95 mm

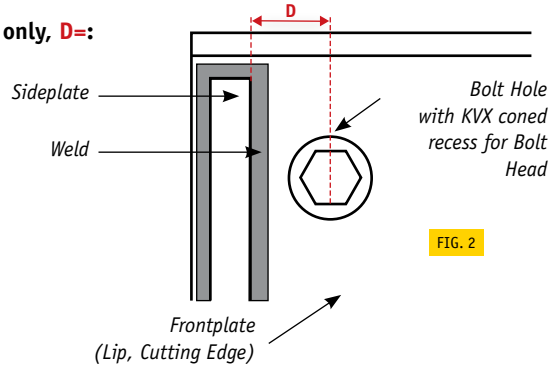

FIG. 2

B) When utilizing KVX's own Hydraulic Tooling, D=:

179050 Tool: 95 mm
179032 Tool: 105 mm
179080 Tool: 111 mm

C) When utilizing alternative Hydraulic Tooling methods, ensure sufficient clearance "D" is provided to allow safe operation of selected Tooling in accordance with manufacturer's instructions.

Note: *The above guidelines are useful for installation of most KVX Front Plates (Lips/ Cutting Edges). Where it is not possible to meet the above minimum recommendations, consult your KVX distributor for further instructions.*

Flame Cutting

(Also applies to KVX wear bar and wear products)

Any flame cutting of the edge requires the following temperature precautions:

1. Preheat steel thicker than 50 mm to 150°C / 300°F.
2. Condition any cold stored steel 45mm or less to 100°C / 210°F before flame cutting.

Preheating

(Also applies to KVX wear bar and wear products)

For proper welds use preheating temperatures in table.

Plate thickness, mm

	20	25	30	35	40	45	50	55	60	65	70	75	80	85	90	95	100	105	110	115	120
Temperature in Celsius	+100-150				+150-200			+200-230													
Interpass- Temperature	+80-150				+130-200			+180-230													
CEV	0,57			0,66				0,74													
CET	0,42			0,43				0,46													

$$CEV = C + \frac{Mn}{6} + \frac{(Mo + Cr + V)}{5} + \frac{(Ni + Cu)}{15}$$

$$CET = C + \frac{(Mn + Mo)}{10} + \frac{(Cr + Cu)}{20} + \frac{Ni}{40}$$

Heat the parts evenly with a suitable gas torch, minimum 150 mm into the bucket bottom plate. Maintain recommended preheating temperature during the complete welding operation, otherwise cracks can develop in the Heat Affected Zone. Let the welded parts cool slowly.

Check preheating temperature by chromatic temperature crayons or any other calibrated device to measure the temperature(in case of infrared device, be aware that the measure is reliable 100% only on black surfaces). Preheating and inter-pass temperatures in excess of 230°C / 450°F will reduce the abrasive properties and the strength of the steel. For cutting edges from 80 mm thickness and up, we recom¬mend preheating with electrical blankets. Temperature measuring is best performed with an infrared handheld gun.

Welding consumables

(also applies to KVX wear bars and wear products)

Use only low hydrogen welding rods (H_2O <5ml/100g). Handle welding consumables according to manufacturer's instructions.

Recommended welding consumables

(Other brands can be used with the same mechanical properties):

MMA (Manual Metal Arc-Electrodes)	GMAW (Mig/Mag Welding-Wire)
ESAB OK 48.15 (AWS: A/SFA 5.1 E 7018-1)	ESAB OK Autrod 12.51 (AWS A5.18-93 ER 70S-6) ESAB OK Autrod 16.95 (AWS A5.9:ER307 mod) **
ESAB OK 55.00 (AWS: A/ SFA 5.1 E 7018-1)	FILARC PZ6105R (AWS: A5.18-93 E70C-6M H4) HYUNDAI Supercored 70SB (AWS: A5.20 E71T-5C)

**Use recomended polarity and gas as described in welding consumables datasheet.*
*** stainless steel mainly used as buffer or for buttering*
(in case are used electrodes is compulsory to use drying ovens to assure the H_2 levels prescribed)

Welding

(also applies to KVX wear bars and wear products)

Weld single beads alternating on either side of the plate as indicated in Fig. 4. Use only straight beads. Grind or gouge the root string prior to welding from the backside. Weld with smooth transitions to the parent material and without any welding defects. We recommend using Voltage, Ampere and welding speeds according to manufacturer specifications.

Welding Sequence

- Generally a welding sequence is favoured which minimizes the restraining forces between the welded parts. This is ensured by giving the parts the freedom of movement during the welding operation Fig 3.
- When installing a cutting-edge to a bucket the base plate must be welded prior to the sides in order to minimize any tension in the welding zones. Weld the last bead on each side with a distance of 3 - 5 mm. to the parent material, to anneal its Heat Affected Zone (HAZ) and reduce the risk of cracks.

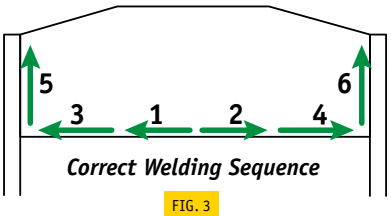

FIG. 3

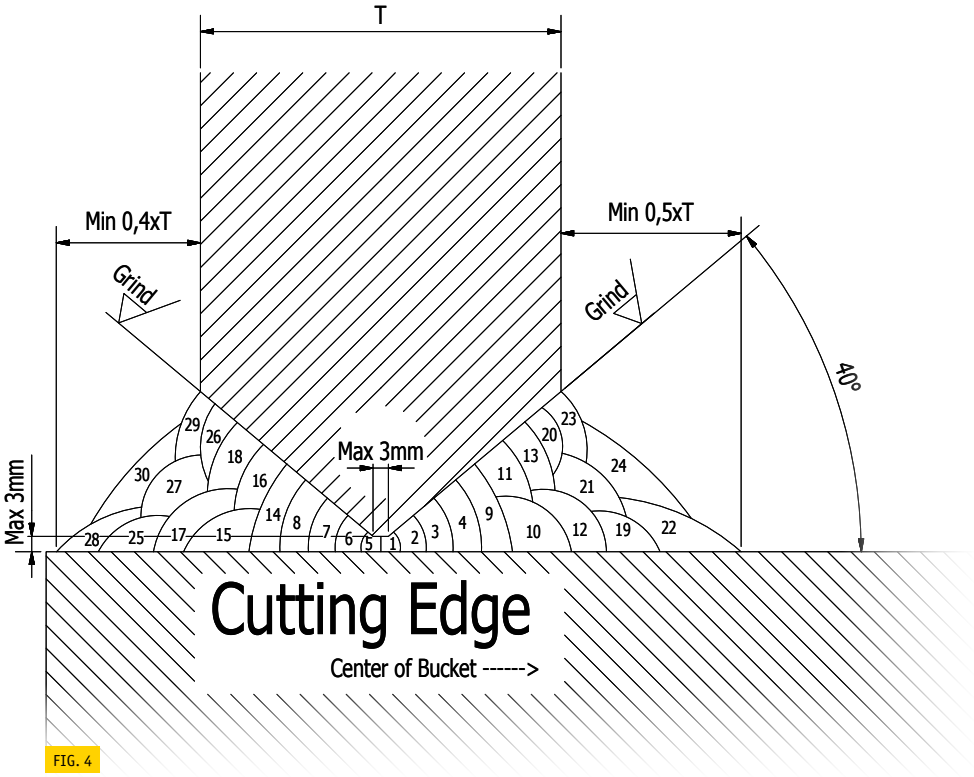

FIG. 4

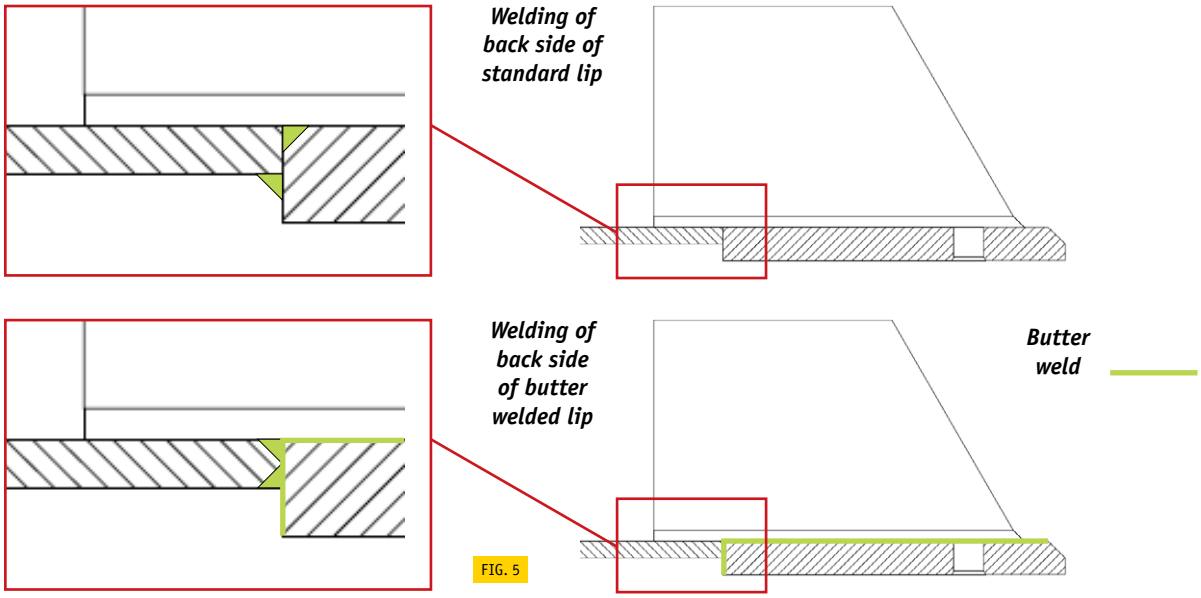

FIG. 5

Grinding

(also applies to KVX wear bar and wear products)

Grind the weld as indicated in Fig. 7/8 and with the grinding marks transverse to the welding direction.

FIG. 6

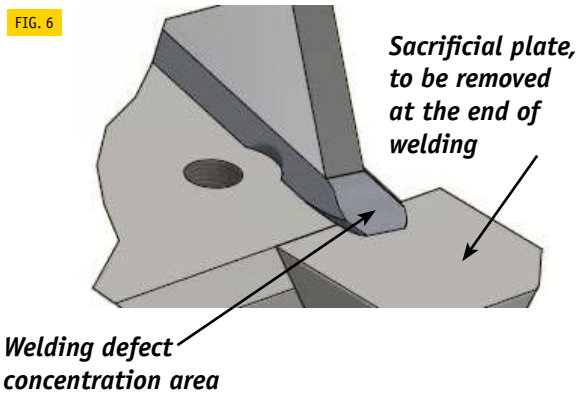

FIG. 7

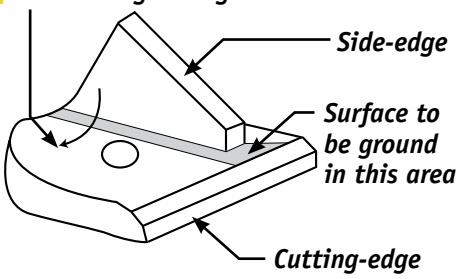

FIG. 8

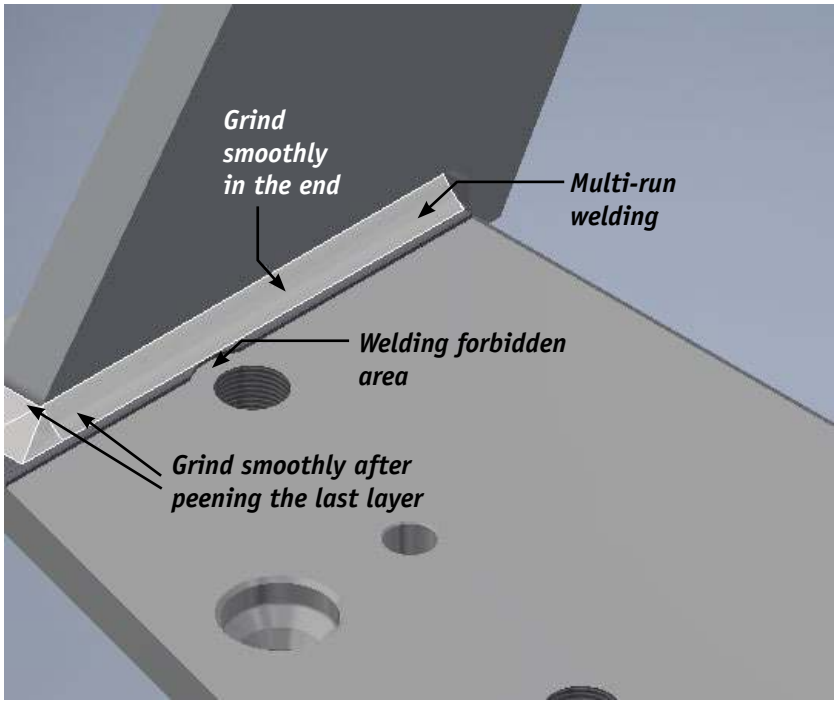

General notes:

1. *All dimensions are min. values*
2. *Number of beads varies according to plate thickness.*
3. *All transitions shall be smooth and without defects, grind if necessary.*

Consequences of incorrect welding operations:

Typical crack patterns resulting from neglecting procedures for preheating and welding sequence.

FIG. 9

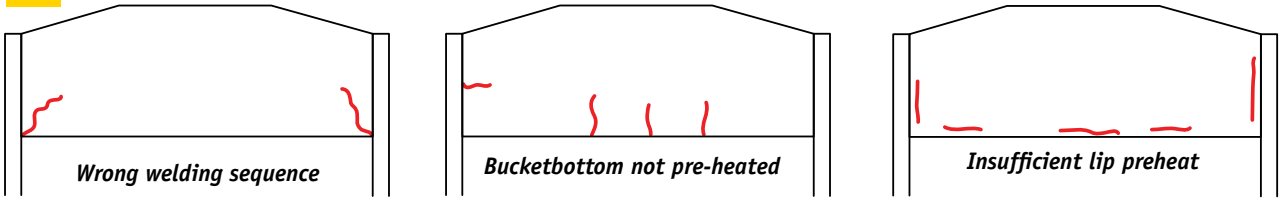

Areas susceptible to cold cracks in weld joint of high-strength wear steel material.

FIG. 10

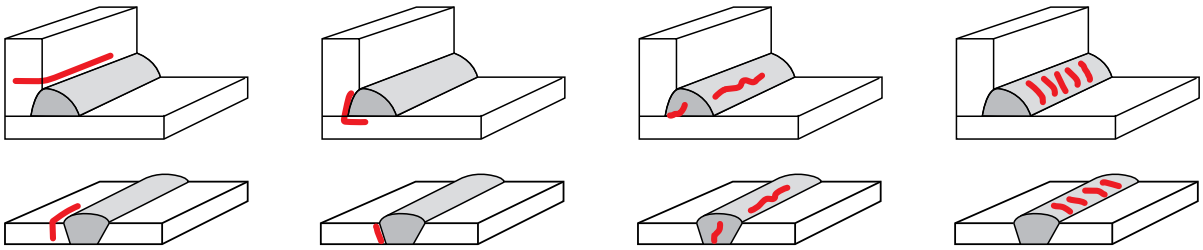

Edge of plate near the weld | *In the plate, close to weld on sides and under* | *In the weld, longditudal* | *In the weld, lateral*

Recommended procedure for Welding of Highly Constrained Joints, welding thicknesses > 100 mm and/or welding across the plate thickness

When welding Highly Constrained Joints, welding thicknesses > 100 mm and/or welding across the plate thickness (fig 11), it is best to cover the surfaces to be welded with weld deposit (butter beading) prior to welding the actual joint. In doing so, the HAZ (Heat Affected Zone) of the base material will be an¬nealed during the welding of the joint. This will reduce the hardness and the stresses in the coarse-grained HAZ, thereby reducing the risk of hydrogen-induced cracks (cold cracks). It is generally beneficial to use a welding technique that involves first placing the weld bead on the base material prior to filling up with weld deposit (see fig 11). It is also beneficial here to hammer the weld using, for instance, a pneumatic slag pick, in order to reduce the shrinkage stresses in the welded joints. For butter beading applications EASB OK Autrod 16.95(stainless steel) is particularly well suited.

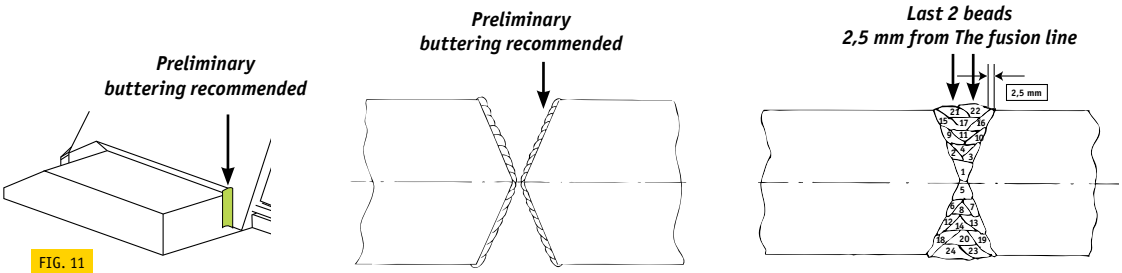

FIG. 11

Welding of Wear Bars

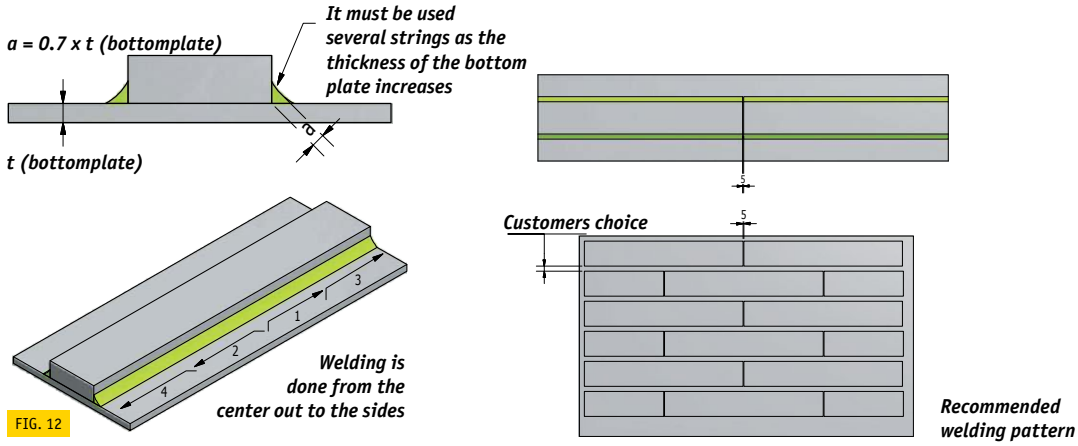

FIG. 12

Installation of teeth

When these installation procedures are followed, the KVX bolt-on wear parts will stand up to extreme loads without loosening. The procedures are applicable to all types of bolt-on wear parts even though teeth only are specifically mentioned, bolted wear parts have to be considered always non-dowelled.

All surfaces must be clean and free of debris: Clean the surfaces with a steel brush and remove any burrs, or dirt. Check that mating surfaces are flat without any deformation and those threads and cones are undamaged.

Use only KVX recommended grease: Apply the recommended grease on threads and cones as shown in the pictures below. Use of other grease may cause bolts to become loose or bolts snapping.

Install teeth: Place the tooth in posi¬tion on the cutting edge and insert the bolts. To ensure good contact in the cone give the tooth a couple of blows sideways.

Tighten bolts to specified torque: Apply torque listed in table below. Smaller bolts, up to M16, can be tightened by means of any appropri¬ate torque wrench and hand power. Bigger bolts require special KVX spanners. M20 bolts can be tightened by hitting the spanner with a 1,5 kg sledgehammer until it stops. Consult table for bolts bigger than M20. Hit the spanner until it stops, which gives a sufficient pre-torque value. Alternatively, use a torque wrench and apply 5% of final specified torque value as the "pre-torque" value. The specified final torque can be achieved by turning the bolts the additional angle by means of hand tools, spanner stand or hydraulic tool. Various brands of hydraulic torque tools can be adapted for KVX bolts. Always assess procedures with reference to local safety regu¬lations and guidelines.

Spanner stand: When using the KVX spanner stand make sure to consult the KVX Spanner Stand Operating Instruction booklet. Follow safety procedures for the torque-up of KVX bolts where safety regulations permit.

Dimen-sion	Tool		DOWELLED PARTS		NON-DOWELLED PARTS	
			Angle 2)	*Torque*	*Angle 2)*	*Torque*
M16	Hand power	60°	-	-	-	250 Nm
M20	Sledgehammer 1-2 kg	90°	-	-	-	500 Nm
M27	Sledgehammer 3-4 kg	105°	-	-	60°	1500 Nm
M36	Sledgehammer 8-10 kg/Spanner stand		-	-	60°	3000 Nm
M48	Spanner stand or Hydraulic tool 1)	120°	-	-	90°	7500 Nm
M52	Spanner stand or Hydraulic tool 1)		150°	12000 Nm	105°	10500 Nm
M60	Spanner stand or Hydraulic tool 1)	150°	180° (+30°)	18000 Nm	120° (+30°)	15000 Nm
M68	Spanner stand or Hydraulic tool 1)		180° (+20°)	26500 Nm	120° (+20°)	22500 Nm
M80	Spanner stand or Hydraulic tool 1)	180°	180° (+20°)	44000 Nm	150° (+20°)	37000 Nm
M90	Hydraulic tool 1)		180° (+20°)	65000 Nm	150° (+20°)	52000 Nm
M100	Hydraulic tool 1)		180° (+20°)	89000 Nm	150° (+20°)	73000 Nm

1) Instructions for KVX's own hydraulic tools available separately.
2) Supplementary angles added by empiric experiences in the field

Atten-tion!

In order to reach the right torque when tightening KVX bolts, we always recommend using KVX recommended grease. Apply grease to threads and cones, both on bolts and on the cutting edge. When installing used equipment and when turning teeth/wear plates, it is critical that all surfaces are thoroughly cleaned using wire brush and scraper.

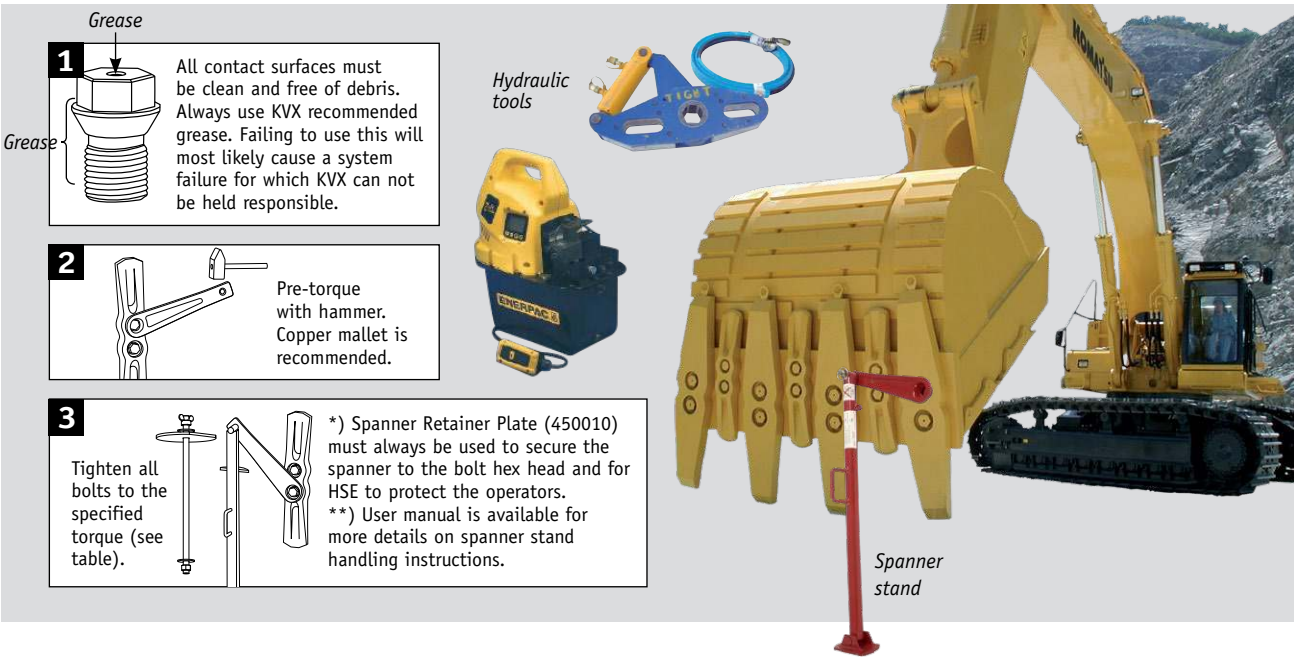

1 

All surfaces must be clean and free of debris.

2 

Pre-torque with 1-2 kg hammer.

3 

Tighten all bolts to the specified torque.

KVX is a Norwegian based company that has gained worldwide recognition for its highly wear resistant bolt-on ground engaging tool system for Excavators, Front Shovels and Wheel Loaders. Feel free to contact us for further information!

Hydraulic power pack and torque tool.

Spanner stand

04.05.601-01-EN Rev 1.1 04/2019

KOMATSU KVX LLC
Plogfabrikkvegen 9,
4353 Klepp Stasjon, NORWAY
Tlf.: +47 51 78 50 80
Faks: +47 51 78 50 81
E-mail: kvx@kvx.no
www.kvx.no